花样缝电脑平缝机

GC6902 Series

Computerized special stitch pattern lockstitch sewing machine

使用说明书
OPERATION MANUAL
零件手册
PARTS BOOK

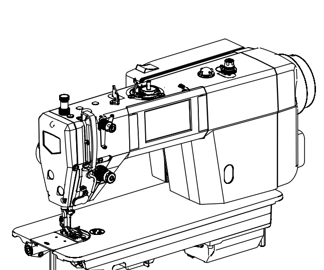

重要安装事项

为使您正确使用本机,须对本机的各种功能充分了解,以便安全操作。使用前请仔细阅读使用说明书。我们希望您能长期愉快地使用本机，请保存好说明书，以备查阅。

1. 无论您何时使用本机，须了解基本的安全事项，包括但不限于下列事项。
2. 通读所有说明，并保存好使用说明书。如果需要，请随时翻阅。
3. 使用本机前，必须弄清与本机有关安全规定、标准在您的国家是否适用。
4. 使用本机前或使用本机时，所有安全装置必须配备齐全。机器运转时，无安全装置属违章操作，决不允许。
5. 操作人员必须经过适当的培训。
6. 为了您的人身安全，我们建议您戴上防护眼镜。
7. 下列情况下，请关闭电源开关或拔下电源插头：
7-1 机针穿线和换梭心；
7-2 更换机针、压脚、针板、送料牙、布料导板等；
7-3 进行维修时；
7-4 操作区无人时。
8. 在机器加油润滑时，若不小心让油接触眼睛、皮肤或咽下机油或润滑油，请立即清洗被沾染部位或去医院检查。
9. 无论机器运转与否，严禁乱动机器零部件和配套装置。
10. 机器的维修、改造和调整等工作必须由专业技术人员进行。
11. 应由专业受训人员进行一般的维修和检查工作。
12. 必须在专业电器人员或专业技术人员的指导下进行有关电器部件的维修，任何电器部件一经发现受损，立即停止机器运转。
13. 使用期间要定期全面彻底清洗机器。
14. 正常操作本机时，必须进行试运转，工作环境远离强噪音源，如高频电焊机等。
15. 由电气人员选择合适的插头和有地线的插座。
16. 若需要改造或改进本机,请采用有效可行的安全措施。本公司对由此而产生的伤害不承担责任。
17. 本机只适用于专业缝纫。
19.两种警告提示符：

⚠ 操作人员或维修人员请注意

⚠ 特别注意事项

IMPORTANT SAFETY INSTRUCTIONS

To get the most out of the many functions of this machine andoperate it insafety,it is necessary to use this machine correctly. Please read this Instruction Manual carefully before use. We hope you will enjoy the use of your machine for a long time. Please remember to keep this manual in a safe place.

1. Observe the basic safety measures, including, but not limited to the following ones, whenever you use the machine.
2.Read all the instructions, including, but not limited to this Instruction Manual before you use the machine, in addition, keep this Instruction Manual so that you may read it at any-time when necessary.
3. Use the machine after it has been ascertained that it conforms with safety rules/standards valid in your country.
4. All safety devices must be in position when the machine is ready for work or in operation The operation without the specified safety devices is not allowed.
5. This machine shall be operated by appropriately-trained operators.
6. For your personal protection, we recommend that you wear safety glasses.
7. For the following, turn off the power switch of disconnect the power plug of the machine from the receptacle.
7-1 For threading needle(s) and replacing bobbin.
7-2 For replacing part(s) of needle, presser foot, throat plate, feed dog, cloth guide etc.
7-3 For repair work.
7-4 For when leaving the working place of when the working place is unattended.
8. If you should allow oil, grease, etc. used with the machine and devices to come in contact with your eyes or skin or swallow any of such liquid by mistake, immediately wash the contacted areas and consult a medical doctor.
9. Tampering with the live parts and devices, regardless of whether the machine is powered, is prohibited.
10. Repairing, reforming and adjustment works must only be done by appropriately trained technicians or specially skilled personnel.
11. General maintenance and inspection works have to be done by appropriately trained personnel.
12. Repair and maintenance works of electrical components shall be conducted by qualified electric technicians or under the audit and guidance of specially skilled personnel. Whenever your find a failure of any of electrical components, immediately stop the machine.
13. Periodically clean the machine throughout the period of use.
14. Grounding the machine is always necessary for the normal operation of the machine. The machine has to be operated in an enviorment that is free from strong noise sources such as high-frequency welder.
15. An appropriate power plug has to be attached to the machine by electric technicians, Power plug has to be connected to grounded receptacle.
16.Remodel or modify the machine in accordance with the safety rules/standards while taking all the effective safety measures. We assumes no responsibility for damage caused by reforming or modification of the machine.
17. The machine is only allowed to be used for the ppose intended. Other used are not allowed.
18. Warning hints are marked with the two shown symbols.

⚠ Danger of injury to operator or service staff

⚠ Items requiring special attention

安全操作事项 FOR SAFE OPERATION

⚠	1. 为避免触电,请不要打开电机的电箱盖,也不要触摸电箱内部组件。 1. To avoid electrical shock hazards, neither open the cover of the electrical box for the motor nor touch the components mounted inside the electrical box.
⚠	1. 为避免人身伤害,移动防护罩、护手挡或安全装置时，请不要开动机器。 2. 为尽可以避免机器运转造成的人身伤害,手指、头部和衣服应远离上轮，上轮周围不要放置任何物品。 3. 为避免人身伤害,当您打开电源开关或操作机器时，切勿将手放在机针下方。 4. 为避免人身伤害,机器运转时，切勿将手放入挑线杆防护罩内。 5. 旋梭运转时，勿将手指放在旋梭附近。另外，换梭芯时，请关掉机器电源开关。 6. 为尽可以避免人身伤害,当翘起或抬起机头时，勿将手指放入机器内部。 7. 为尽可以避免机器的突然启动所造成的事故，抬起机头时，请关掉机器的电源。 8. 机器配有电机，机器未运转时，电机无噪音；为避免机器的突然启动所造成的事故，请关掉机器的电源开关。 9. 为尽可能避免触电或电器组件受损，在插上或拔下插头之前，请关掉电源开关。 1. To avoid personal injury, never operate the machine with any of the belt cover, finger guard of safety devices removed. 2. To prevent possible personal injuries caused by being caught in the machine. Keep your fingers, head and clothes away from the handwheel, cover and the motor while the machine is in operation. In addition, place nothing around them. 3. To avoid personal injury, never put your hand under the needle when you turn ON the power switch or operate the machine. 4. To avoid personal injury, never put your fingers into the thread take-up cover while the machine is in operation. 5. The hook rotates at a high speed while the machine is in operation. To prevent possible injury to hands, be sure to keep your hands away from the vicinity of the hook during operation. In addition, be sure to turn OFF the power to the machine when replacing the bobbin. 6. To avoid possible personal injuries, be careful not to allow your fingers in the machine when tiling/raising the machine head. 7. To avoid possible accidents because of abrupt start of the machine, turn OFF the power to the machine when tiling the machine head. 8. If your machine is equipped with a serve-motor, the motor does not produce noise while the machine is at rest. To avoid possible accidents due to abrupt start of the machine, be sure to turn OFF the power to the machine. 9. To prevent possible accidents because of electric shock or damaged electrical component(s), turn OFF the power switch in prior to the connection /disconnection of the power plug.

开机前的注意事项 Precautions Prior to Startup

1. 机头装箱前为了防止机件生锈,在部分均涂有较厚的防锈油脂,同时机头装箱后,还可能在较长的贮藏和长途运输阶段造成油脂硬化和在机器表面积聚灰尘,所以必须将表面的油脂和灰尘用汽油和洁净的软布擦拭干净。
2. 机器出厂时，虽经过周密的检查和试验，但在长途运输中也可能受到强烈的震动使机件松动或歪曲，所以应该做一次周密的检查，并用手转动上轮，看机件之间有无转动困难、碰撞现象或其它不均匀的阻力，不正常的声响，如有应作适当的调整，机器状态正常后才可正式试车。
3. 油盒内机油液面高度没有在正常范围内绝不能开车。
4. 机器运转时，上轮转向应该是逆时针方向（从上轮外侧面看）。
5. 确认电控铭牌上所标电压及相位是否正确。
6. 生产日期见合格证。

1. The machine head is coated with a thick layer of rust-prevention grease before encasement, and the encased machine head may possibly be subjected to grease hardening and dust buildup on the machine surface in process of long storage and long-haul traffic; therefore, take care to remove the grease and dust from the surface using soft cloth and gasoline.
2. Though the machine was inspected and tested with care before factory leaving, it might be affected by violent vibration resulting in looseness or distortion of the machine parts; therefore the operator shall thoroughly check the machine, turn the upper wheel by hand and check it for difficulty in free rotation, slight impact, and other uneven resisting force or abnormal noises, and make appropriate adjustment if any to restore the machine state before formal trial run.
3. Never start up the machine if the oil liquid level in the oil box falls outside the normal range.
4. The upper wheel shall rotate counterclockwise (when it is viewed from the lateral surface of the upper wheel) when the machine is operating.
5. Check whether the voltage and phases indicated on the electric-control data plate are correct.
6. The date of manufacture is indicated on the certificate of conformity.

使用注意事项 Precautions for Use

1. 当接通电源或机器运转时，请勿将手与机针接触。
2. 机器运转时,请勿将手指伸入挑线杆防护罩内。
3. 操作者用手送料时,请勿将手指伸入护针架。
4. 机头翻动及拆手盖时,一定要切断电源。
5. 操作者离开机器时,必须切断电源。
6. 机器运转时,绝不允许头或手以及任何东西靠近上轮、绕线器。
7. 只有在停机时，才能装卸防护罩或其它保护装置。
8. 不能用香蕉水等油漆稀释剂擦拭机头表面。

1. Never touch the needle by hand when the machine is powered on or while it is operating.
2. Never put your finger into the protection cover of take-up lever during operation of the machine.
3. The operator must not put his finger into the needle guard bracket when he feeds the sewing materials by hand.
4. Operator must trim off the electricity supply before he turns over the machine head or removes the hand cover.
5. The operator must trim off the electricity supply before he gets away from the machine.
6. Prohibit the head, hands and anything to approach the upper wheel and bobbinwinder while the machine is operating.
7. Never remove or mount the protection cover or other protection devices before the machine is stopped.
8.Never wipe up the surface of machine head using paint thinner such as acetone.

1.缝纫机规格 MACHINE SPECIFICATIONS

		620	620M	620H
用途 USE		薄料、中厚料 Medium-weight materials		厚料 Heavy-weight materials
最高缝速 MAX. Sewing speed		5000sti/min		4000sti/min
最大针距 MAX.Stitch length		5mm	7mm	7mm
压脚高度 Presser foot height	手抬 lifting lever	5.5mm		
	膝控 Knee lifter	13mm		
	自动 automatic	9.5mm		
送料牙高度		1.0mm		1.2mm
机针 Needle		DBx1 9#-18#		DPx5 18#-22#
润滑油		15号白油 NO.10 White oil		

2-1. 安装方法 Installation

①. 调速器
①. Speed controler
②. 连杆
②. Connecting rod

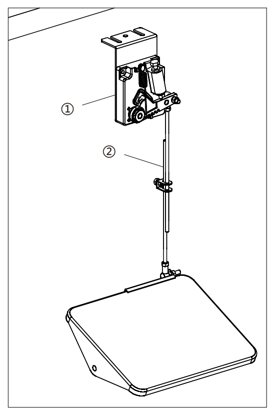

2-2. 安装 Installation

①. 鞋钉（8个）
②. 机头连接钩座（2个）
③. 头部防震垫(小)（2个）
④. 头部防震垫(大)（2个）
⑤. 托盘（1个）
⑥. 螺钉（6个）

①. Nail (8pcs)
②. Rubber cushions (2pcs)
③. Head cushions(small) (2pcs)
④. Head cushions(big) (2pcs)
⑤. Tray (1pcs)
⑥. Screw (6pcs)

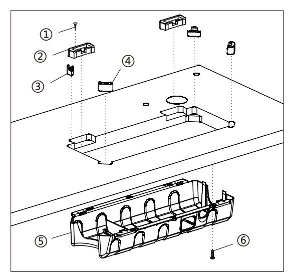

2-3. 机头 Machine head

①. 机头
②. 机头铰链（2pcs）
③. 机头支柱
④. 回油管部件

①. Machine head
②. Hinges (2pcs)
③. Frame support bar
④. Oil tube

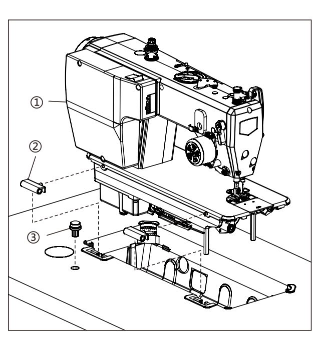

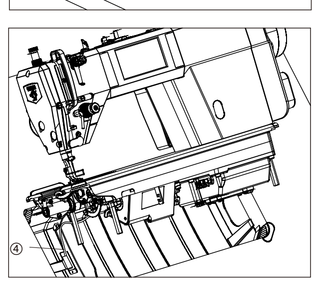

2-4. 线架 Cotton stand

①线架
①Cotton stand

注意：将螺母④拧紧以便将两个橡胶垫圈(2)和垫圈③夹紧，使线架①固定

NOTE:
Securely tighten the nut ④ ,so that the two rubber cushions ② and the washer ③ are securely clamped and so that the cotton stand ① does not move

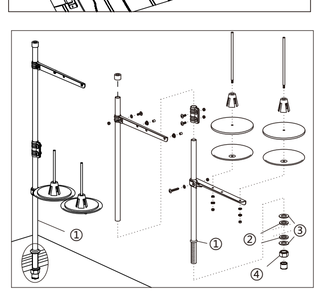

3. 加油方法 Lubrication

⚠ 注意 CAUTION

在加油未完成前，请勿插上电源。
当误踩下脚踏板时，缝纫机运作会导致人员受伤。
使用润滑油时，请务必戴好保护眼镜和保护手套等，以防润滑油落入眼中或沾在皮肤上，这是引起发炎的原因。
另外，润滑油不能饮用，否则会引起呕吐和腹泻。
将油放在儿童拿 不到的地方。
在剪去油箱的油嘴口时，请一定要拿住油箱的根部。
如果拿油嘴口部位，剪刀容易伤到手，成为受伤的原因。

Do not connect the power cord until lubrication has been completed. otherwise the machine may operate if the treadle is depressed by mistake. Which could result in injury.
Be sure to wear protective goggles and gloves when handing the lubricating oil and grease, so that they do not get into your eyes or onto your skin, otherwise inflammation can result.
Furthermore, do not drink the oil or eat the grease under any circumstances, as they can cause vomiting and diarrhea.
Keep the oil out of the reach of children.
When cutting the nozzle of the oil tank, hold the base of the nozzle securely.
If you hold the end of the nozzle, injury from the scissors may result.

初次使用缝纫机前需添加润滑油以保证机器各部件的润滑，以延长机器寿命
1. 将油孔塞①打开
2.将白油注入机头加油孔中
3.加油过程中观察测量视窗②,使油量计③稳定在上下基线之间
注意：
(1) 油量计不可超过视窗上基线
(2) 如油量计③低于下基线，则必须加润滑油

Before the first time use this machine, you need to add oil to ensure the lubrication of the mechanical parts of the machine to prolong the service life of the machine ,to prolong the service life of the machine.
1. Open the oil rubber①
2. add oil into the machine
3. look at the oil window ② during adding oil, to make the oil guage ③ is steable between the top and bottom baselines.

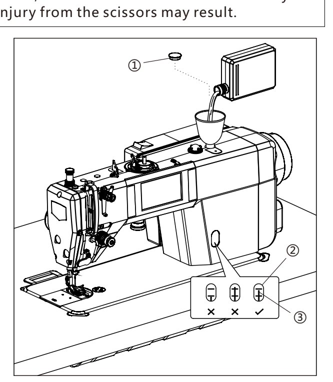

NOTE:
(1) The oil guage can not be over the top baseline in the window.
(2) If the oil guage ③ is lower than the buttom baseline, machine must be added oil.

4. 面线的穿法 Threading the upper thread

⚠ 注意 CAUTION

在穿线过程中，请切断电源。当误按动启动开关时，缝纫机动作会导致人员受伤。
Turn off the power switch before threading the upper thread.
The machine may operate it the treadle is depressed by mistake, which could result in injury.

在穿引面线之前转动手轮，抬高挑线杆①,这样会使穿线更加容易，并防止面线在缝纫开始时脱落

Turn the machine pulley and raise the thread take-up ① before threading the upper thread.
This will make threading easier and it will prevent the thread from coming out at the sewing start.

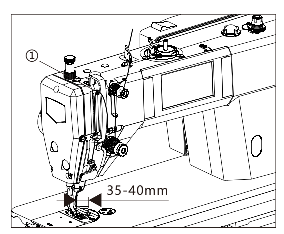

5. 机针和旋梭的同步 Adjusting the needle and rotary hook timing

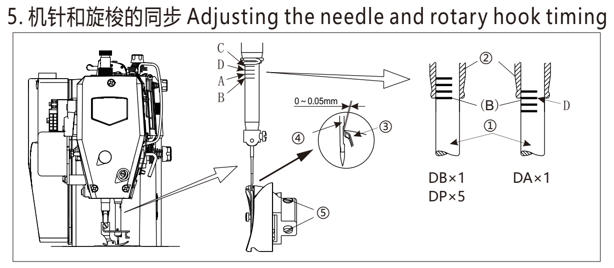

当针杆①从最低位置向上移动1.8mm（2.2mm用于M和H规格），到达基线B与针杆轴套②下端对齐的位置时，旋梭尖③应与机针中心④对齐，如图所示。(此时,针孔上边缘与旋梭尖的距离为0.5-0.7mm)
1. 转动缝纫机手轮，使针杆①从最低位置上升到如图所示的基线B与针杆轴套②的下端保持对齐为止
2. 旋松固定螺钉⑤[3个]，使梭尖(3)与机针(4)的中心一致。此时旋梭尖③与机针④之间的间隙为0-0.05mm
3. 拧紧固定螺钉⑤[3个]

The tip of the rotary hook ③ should be aligned with the center of the needle ④ when the needle bar ① moves up 1.8mm (2.2mm for -M and -H specifications) from its lowest position to the position where reference ling B is aligned with the lower edge of the needle bar bush ② as shown in the illustration.
(the distance from the upper edge of the needle hole to the rotary hook tip will be 0.5 to 0.7mm at this time)
1.Turn the machine pulley to raise the needle bar ① from its lowest position until reference line B is aligned with the lower edge of the needle bar bush D ② as shown in the illustration.
2.Loosen the set screws ⑤ , and then align the tip of the rotary hook ③ with the center of the needle ④,
The distance between the tip of the rotary hook ③ and the needle ④ should be approximately 0-0.05mm.
3.Securely tighten the set screws ⑤.

6. 踏板的调整 Adjustment of the pedal

⚠ 注意 CAUTION

为了防止意外启动造成的事故，请关掉电源后进行。
Turn off the power before starting the work so as to prevent accidents caused by abrupt start of the sewing machine.

1. 踏板角度的调整
1) 调节踏板连接杆的长度即可以调节踏板的角度：旋松螺钉①，上下移动上连接杆②和下连接杆③就可以调节踏板连接杆的长度。
2) 调节完成后旋紧螺钉①。
2.踏板踩踏力的调整
将脚放在踏板上并向前轻踩踏板时，缝纫机进行低速缝纫。如感觉踩踏力比较轻时，将踩踏力调节弹簧④挂在踏板旋臂拨杆⑤的位置上进行调节(踩踏力以a为最小，b、c、d依次逐渐增大)。
3.踏板返回力的调整
1）松开螺母⑥，旋转螺栓⑦调节踏板返回力：拧紧螺栓⑦则踏板返回力将增大，拧松螺栓⑦则踏板返回力将减小。
2）调节完踏板返回力后，请拧紧螺母⑥。

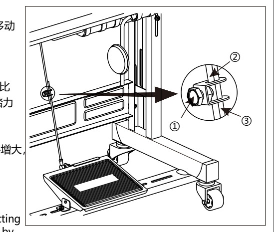

1.Adjusting the angle of treadle
1)Adjust the angle of treadle only by adjusting the length of treadle connecting rod: unscrew screw ①, and adjust the length of treadle connecting rod by moving upward/downward the upper connecting rod ② and lower connecting rod ③.
2)Screw down screw ① when adjustment is over.
2.Adjustment of the strength of pedalThe sewing machine run at a low speed when step forth on the panel slightly. If the strength is insufficient, hang the stepping adjustment spring ④ on the panel spiral arm driving lever ⑤ in order to adjust strength.(a is the minimum stepping strength ,b,c,d increase gradually)
3.Adjustment of stepping return strength
1)Loosing nut ⑥ and turn bolt ⑦ to adjust stepping return strength : tighten bolt ⑦, the strength increases;loosen bolt ⑦, the strength decreases.
2)Tighten nut ⑥ after adjusting stepping return strength.

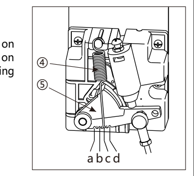

踏板操作 Pedal operation

1.踏板有4级操作：
1）向前轻踩踏板为低速缝纫(图示B)。
2）再用力向前踩踏板则变为高速缝纫(图示A)。
3）当脚不向踏板施力，则踏板回复到原始状态时，缝纫机停止运转(机针在上停针或下停针位置)(图示C)。
4）再用力向后踩踏板为切线动作(图示E)。
5）使用自动压脚提升装置时，在停止和切线之间增加一级开关D。向后轻踩踏板为压脚提升动作，继续向后强力踩踏板，压脚下降进行切线动作，再次进行压脚提升动作。

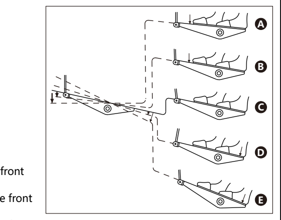

1.The treadle has 4 operation levels:
1)The machine runs at low sewing speed when you lightly depress the front part of the pedal. (as show in the picture B)
2)The machine runs at high sewing speed when you further depress the front part of the pedal.(as show in the picture A)
3)Penal back to the initial position when stop stepping on it and the machine stop working.(needle in the upper or down position)(as show in the picture C)
4)The machine trims threads when you fully depress the back part of the pedal.(as show in the picture A)
5)When the auto-lifer is used,one more operating switch is provided between the sewing machine stop switch and thread trimming switch. The presser foot goes up when you lightly depress the back part of the pedal(D),and if you further depress the back part,the thread trimmer is actuated.

7-1. 标准调整 Standard adjustment

⚠ 注意 CAUTION

只有经过训练的专业人员才能进行缝纫机的维修、保养和检查。
Maintenance and inspection of the sewing machine should only be carried out by a qualified.

与电气有关的维修、保养和检查请委托购买商店或电气专业人员进行。
Ask your dealer or a qualified electrician to carry out any maintenance and inspection of the electrical system

取下的安全保护装置，再次安装时，请务必安装在原位上，并检查能否正常地发挥作用
If any safely devices have been removed, be absolutely sure to re-install them to their origin positions and check that they operate correctly before using the machine

缝纫机头倒下或竖起时，请用双手进行操作。单手操作时因缝纫机的重量万一滑落易导致受伤。
Use both hands hold the machine head when tilting it back or returning it to its original position. If only one hand is used the weight of the machine head may cause your hand to slip, and your hand may get caught.

发生下列情况时，请关闭电源，并拔下电源插头，否则误踩下踏板时，缝纫机运作会导致受伤
· 检查、调整和维修
· 更换旋梭、切刀等易损零部件
Turn off the power switch and disconnect the power cord from the wall outlet at the following times. Otherwise the machine may operate if the treadle is depressed by mistake, which could result in injury.
· When carrying out inspection, adjustment and maintenance
· When replacing consumable parts such as the rotary hook and knife.

7-1. 调线量的调整

1.旋松螺钉①。
2.移动右线钩②进行调节：朝左方向(即A方向)移动，挑线量将会增加；反之朝右方向(即B方向)移动，挑线量将会减少。(右线钩上的刻线C与螺钉中心一致时为标准位置)。
3.调节完成后拧紧螺钉①。

1.Unscrewing the screw ①.
2.Move the right thread hook ② to adjust : the thread amount of thread take-up lever will increase if turned it towards left (A direction), while turning it to the right (direction B) and the thread amount of thread take-up lever will decrease accordingly.(The standard position is obtained when graduation line C on right thread hook is aligned to screw center.)
3.Remember to tight the screw ① after adjusting.

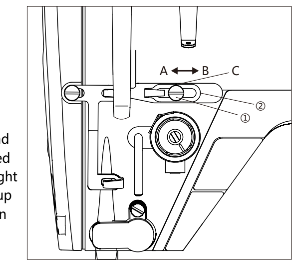

7-2. 送料牙的高度 Adjustment of the Height of feed dog

1.转动手轮，将送料牙升到针板的最高位置。
2.将缝纫机放倒，并支到机头支柱上。
3.旋松抬牙叉形曲柄②上的紧固螺钉①。
4.转动抬牙叉形曲柄②进行调节：将抬牙叉形曲柄②向A方向转动，送料牙将变高；反之向B方向转动，送料牙将变低(当送料牙升到针板的最高位置时，中厚料机型送料牙距针板的标准高度为0.8-1.0mm，厚料机型的标准高度为1.1-1.3mm)。
5.调节完成后拧紧抬牙叉形曲柄②上的紧固螺钉①。

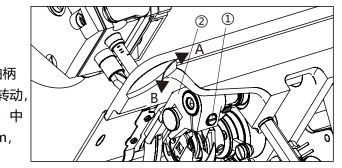

1.Turn the pulley until the feed dog rises to the highest position.
2.Turn over the sewing machine head on the supporting bar.
3.Unscrewing the tightened screw ① in thefeed lifting crank ②.
4.Rotating the feed lifting crank ② to make adjustment: the feed dog will be higher when the feed lifting crank ② is turn towards A direction; turn towards B direction the feed dog will be lower.
(When the feed dog in the highestposition, the standard height of the type of medium-heavy machine is 0.8~1.0mm and standard height of the heavy duty machine is 1.1~1.3mm）.
5.Remember to tighten the tightening screw ① in the feed lifting crank ② after adjusting.

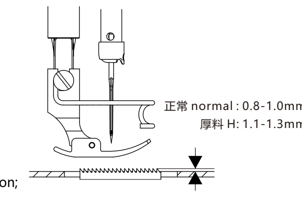

7-2. 送料牙倾斜的调节 Adjust the lean of feed dog

1.转动手轮，将送料牙④升到针板的最高位置。
2.将缝纫机放倒，并支到机头支柱上。
3.旋松牙架座②上的紧固螺钉①。
4.用螺丝刀转动偏心销③进行调节：将偏心销③向A方向转动，送料牙前端放下；向B方向转动，送料牙前端抬起(当送料牙升到针板的最高位置时，送料牙标准倾斜为偏心销③上的刻点C与牙架座②上的刻横D对齐，送料牙与针板平行)。
5.调节完成后拧紧牙架座②上的紧固螺钉①。

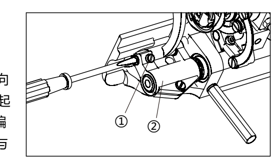

1.Turn the pulley until the feed dog ④ rises to the highest position.
2.Turn over the sewing machine head on the supporting bar.
3.Unscrewing the tightening screw ① in the teeth pedestal ②.
4.Adjust the eccentric pin ③ by screw driver: Fall front site of tooth feed when moving the eccentric pin ③ towards A, and raising it when move towards B.(When raising the tooth feedto the highest position, The standard lean position of feed dog is that mark C on eccentric pin ③ should be at the same level D with mark on the teeth pedestal ② and the feed dog should be parallel with needle plate.)
5.Remember to tighten the tightening screw① in the teeth pedestal ② after adjusting

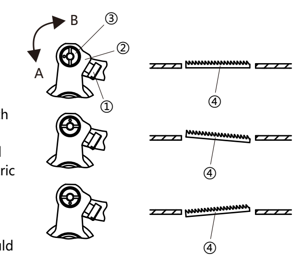

· 为了防止起皱，可降低送料牙前端。
· 为了防止在重叠缝纫时布料不一致(缝线不合)，可提高送料牙前端。
· 调节送料牙的倾斜度后，送料牙的高度也会发生改变，因此请重新调节送料牙的高度。
· In order to prevent puckering,lower the front of the feed dog.
· In order to prevent the material from slipping,raise the front of the feeddog.
· The height of the feed dog will change after the angle has been adjusted,so it will be necessary to readjust the height of the feed dog.

8. 线张力的调节 Adjusting the Tension of Stitch Thread

⚠ 注意 CAUTION

取出梭芯套时，请关闭电源。
当误踩下踏脚板时，缝纫机动作会导致人员受伤。
Turn off the power switch before removing or inserting the bobbin case.
The machine may operate of the treadle is depressed by mistake, which could result in injury.

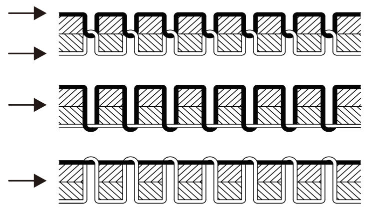

面线张力过小或底线张力过大。
Upper thread tension too weak or Lower thread tension too strong

面线张力过大或底线张力过小。
Upper thread tension too strong or Lower thread tension too weak

1.底线张力的调节
拉住从梭芯套中露出的线头，旋转调节螺钉①进行调节：旋紧调节螺钉①则底线张力变大，反之则底线张力变小。

1.Adjusting the tension of bobbin thread Hold the end of a thread which hanging from the bobbin case and use the adjusting rotating scerw①to regulate. The tension of the bottom thread is become strong by tight the screw ①, loose the screw to make it weak.

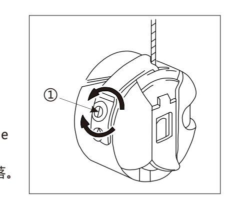

底线张力调节标准：旋转调节螺钉①直至梭芯套以自重慢慢垂落。
The adjust standard of the bottom thread tension: Rotating the adjusting screw ① till the bobbin case can falling slowly by it's own weight.

2.面线张力的调节
在底线张力调节之后，调节面线张力以使针脚均匀平整。
1) 使用压脚扳手将压脚放下。
2) 转动夹线螺母②进行调节：朝顺时针方向(即A方向)转动时，面线张力将增大；朝逆时针方向(即B方向)转动时，面线张力将减小。

2.Adjusting the tension of needle thread
After the lower thread tension has been adjusted,adjust the upper thread tension so thata good,even stitch is obtained.
1) Lower the presser foot by using the lifting lever.
2) Adjust by turning the tension nut ② : The tension of the upper thread will become strong when turning toward the clockwise(A), otherwise weak when toward anti-clockwise (B).

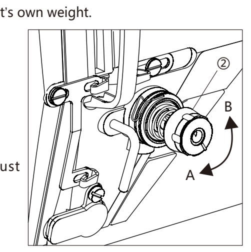

9. 旋梭供油量的调整

⚠ 注意

在检查旋梭供油量时，手指和油量测试纸不能碰到旋梭和送布机构等运动部件这是导致人员受伤的原因。

如果更换了旋梭或要变更缝纫速度时，请按下述步骤重新调整旋梭的供油量

1.调节方法
1）旋梭的油量是用旋梭油量调节螺钉①和螺钉②来调节：拧紧(向右转动)旋梭油量调节螺钉①或拧松(向右转动)旋梭油量调节螺钉②旋梭油量将增多，反之旋梭油量将减少，直至获得适当的供油量为止。
2）调节油量后缝纫机在进行约2小时的缝纫后，再次检查以确认供油量。

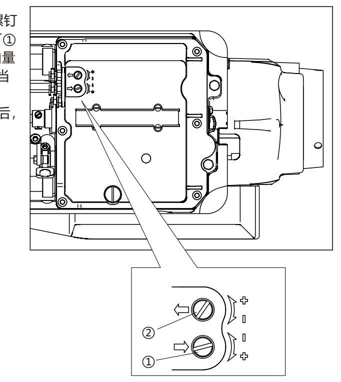

2.油量的确认方法
1）拆去挑线杆至机针上的面线。
2）用抬压脚扳手抬起压脚。
3）以缝纫机实际缝纫时的转速进行约3分钟的空运转(适度的断续运转)。
4）将油量测试纸③插入旋梭④的下面并握住，以缝纫机实际进行缝纫时的转速使缝纫机运转10秒钟。(对油量测试纸③的纸质没有什么特别的要求)
5）确认飞溅到测试纸③上的油量。

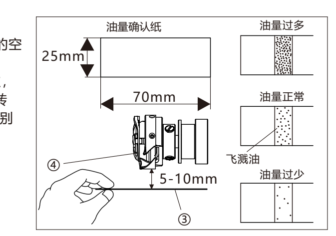

9. Oil mass Adjustment of Rotating Hook

⚠ CAUTION

Be careful not to touch your fingers or the lubrication amount check sheet against moving parts such as the rotary hook or the feed mechanism when checking the amount of oil supplied to the rotary hook. If care is not taken, injury may result.

Use the following procedure to check the amount of oil being supplied to the rotary hook or when changing the sewing speed.

1.Adjustment method
1) Adjust the oil mass of rotating hook using adjusting screw ① or screw ② : Screw down (turn it to the right) adjusting screw ① or unscrew (turn it to the left) the adjusting screw② to raise the oil mass otherwise to lower the oil mass. Amount repeatedly until the lubrication amount is correct.
2)Check the lubrication amount again after the sewing machine has been used for approximately two hours.

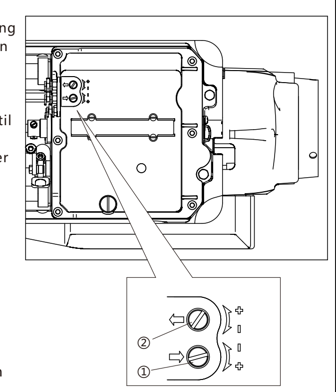

2.Confirming the Oil Mass
1) Remove the thread from all points from the thread take-up to the needle.
2) Use the lifting lever to lift the presser foot.
3) Run the machine at the normal sewing speed for approximately 3 minute without sewing any material (following the same start/stop pattern as when actually sewing)
4) Place the lubrication amount check sheet ③ underneath the rotary hook ④ and hold it there.Then run the sewing machine at the normal sewing speed for 10 seconds.(Any type of paper can be used as the lubrication amount check sheet ③).
5) Check the amount of oil which has spattered onto the sheet③.

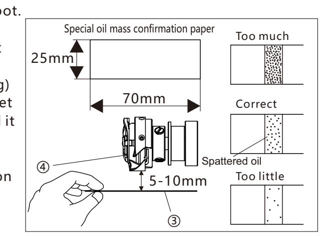

10. 切线 Thread trimming

1. 使用粗线或不能切线时，将螺钉①和螺钉②松开，调整上动刀③角度。
2. 上动刀③向里侧倾斜时，刀面压力长升，向外侧倾斜时，刀面压力下降。
3. 调整好上动刀③角度后重新拧紧螺钉①和螺钉②。
4.调整后请手动上下动刀架，确认是否可以正常切线。

1. When use thick thread or not trim, loosen the screw① and ②, adjustment the moving knife ③ angle.
2. Knife ③ tilted to the inside, the knife surface presser drop.
3. Adjust the knife ③ anger, then retighten the screw ① and screw ②.
4. After adjustment, manually move up and down the knife holder to confirm whether the machine can trim thread normally or not.

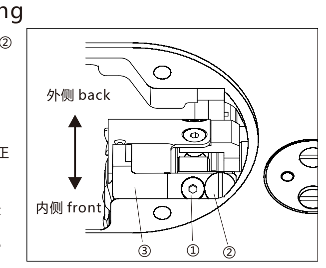

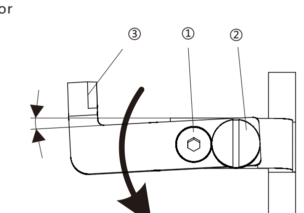

11. 膝控的安装 Knee control installation

1. 将电子膝控组件②固定在台板上，旋紧固定螺钉①。
2. 将膝控组件③与膝控接头⑤、电子膝控组件②连接。
3. 拧紧螺钉④。
4. 安装后检查膝控组件是否灵活。

1. The electronic knee assembly② is fixed on the plate and the fixed screw① is tightened.
2. Connect the knee control assembly③ with the knee control joint ⑤ and the electronic knee assembly ②.
3. Tighten the screw ④.
4. Check whether the knee control is flexible after installation.

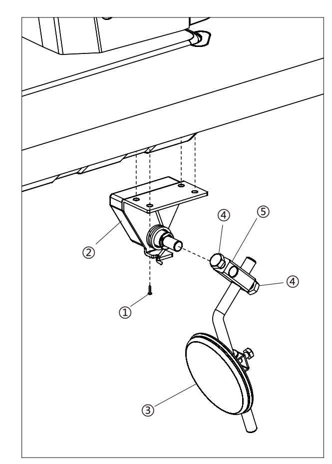

1. 机壳分组件/Machine frame&miscellaneous cover components

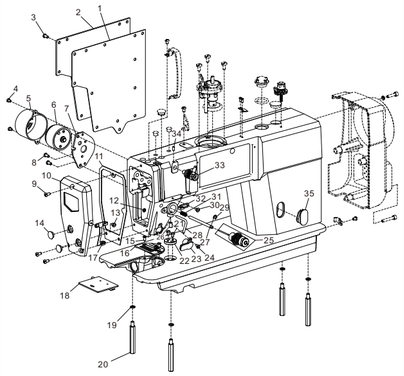

序号 Ref.No.	物料号 Part.No.	名称	Description	数量 Q'ty	备注 Remark
1	29.07.005	后面板垫	Side plate gasket	1	
2	29.07.065	后面板	Side plate	1	
3	02.09.033	螺钉	Screw	10	
4	29.02.115	螺钉	Screw	2	
5	29.07.035	松线电磁铁罩	Cover Piece	1	
6	29.07.055HL	松线电磁铁部件	Electromagnes	1	
7	29.07.010	电磁铁固定板	Mount plate	1	
8	02.09.007	螺钉	Screw	2	
9	02.09.033	螺钉	Screw	3	
10	29.07.064	面板	Face plate	1	
11	29.07.004	面板垫	Face plate gasket	1	
12	29.01.204-1	六角螺母	Nut	1	
13	02.09.010	螺钉	Screw	1	
14	02.05.016	面板塞	Rubber plug	2	
15	02.09.026	螺钉	Screw	2	
16	29.01.114	针板	Needle plate	1	
16	05.01.028	针板	Needle plate	1	H
17	29.07.011	左线钩	Arm thread guide left	1	
18	02.06.001	推板部件	Side plate ASM.	1	
19	23.302	弹簧垫圈	Washer	4	
20	01.01.001	底板支柱	Bed screw stud	4	
21	02.09.035	螺钉	Screw	2	
22	02.05.003	卷边器座	Ruler plate	1	
23	29.07.056HL	电子夹线器部件	Electromagnet	1	
24	11.05.099	螺钉	Screw	1	
25	02.02.021BZ	夹线器部件	Thread take-up device	1	
25	02.02.021BZ	夹线器部件	Thread take-up device	1	H
26	02.09.035	螺钉	Screw	1	
27	29.07.018	松线辅钉	Tension release supporting pin	1	
28	29.01.204	缓线钩	Side plate gasket	1	
29	23.300	开口挡圈	Side plate gasket	1	
30	02.09.010	螺钉	Screw	1	
31	29.01.199	松线辅钉弹簧	Spring	1	
32	02.07.012	右线钩	Arm thread guide right	1	
33	29.01.053BZ	上夹线器	Thread take-up device	1	
34	29.02.108	螺钉	Screw	1	
35	29.07.034	油标窗	Oil window	1	

1. 机壳分组件/Machine frame&miscellaneous cover components

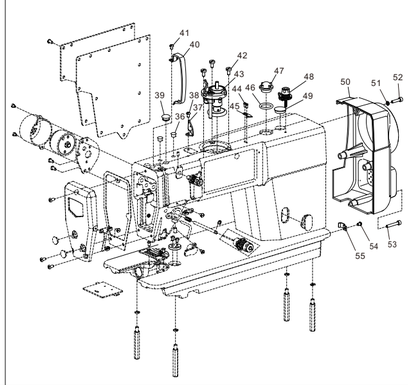

序号 Ref.No.	物料号 Part.No.	名称	Description	数量 Q'ty	备注 Remark
36	02.05.017	橡胶塞	Rubber plug	1	
37	29.01.179	三眼过线板	Thread tension guide	1	
38	02.09.007	螺钉	Screw	1	
39	02.05.013	橡胶塞	Rubber plug	1	
40	29.07.084	挑线杆护罩	Thread take-up lever cover	1	
41	02.09.007	螺钉	Screw	1	
42	29.02.005	螺钉	Screw	3	
43	29.07.082	绕线器部件	Bobbin wider ASM.	1	
44	29.02.096	螺钉	Screw	2	
45	29.01.017	绕线切刀	Thread cutter	1	
46	02.05.005	O形圈	O-ring	1	
47	02.05.006	油窗	Oil window	1	
48	29.01.053BZ	绕线夹线器部件	Thread take-up device	1	
49	29.01.109	橡胶塞	Rubber plug	1	
50	30.01.096	电机罩壳	Cover Piece	1	
51	0000	垫圈	Washer	3	
52	29.02.097	螺钉	Screw	3	
53	0000	螺钉	Screw	1	
54	02.09.007	螺钉	Screw	1	
55	05.05.016	电线夹	Cable clip	1	
51	02.05.017	橡胶塞	Rubber plug	2	

2. 上轴、挑线分组件/Main shaft&thread take-up components

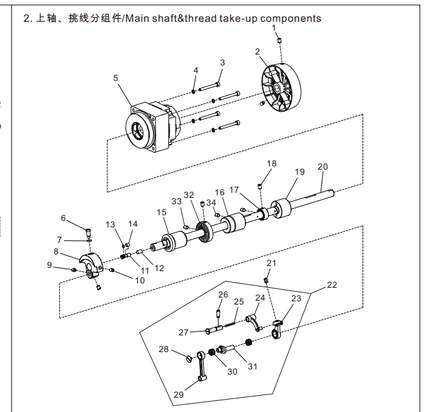

序号 Ref.No.	物料号 Part.No.	名称	Description	数量 Q'ty	备注 Remark
1	29.02.103	螺钉	Screw	2	
2	29.07.083	上轮	Head wheel	1	
3	29.06.016	切线曲柄	Trimming crank	1	
4	29.06.033	螺钉	Screw	4	
5	30.01.094	上轴电机	Motor	1	
6	02.09.004	螺钉	Screw	1	
7	01.03.012	O形圈	O-ring	1	
8	29.01.151	针杆曲柄	Counter weight	1	
9	01.10.039	螺钉	Screw	2	
10	02.09.003	螺钉	Screw	1	
11	02.07.013	曲柄油量调节销	Adjusting pin	1	
12	23.81	曲柄油量限制毡	Felt	1	
13	02.05.018	O形圈	O-ring	1	
14	02.07.014	曲柄油量调节销套	Sleeve of adjusting pin	1	
15	29.07.076	上轴前轴套	Bearing support	1	
16	29.07.077	上轴中轴套	Bearing support	1	
17	29.07.019	上轴挡圈	Thrust collar	1	
18	01.10.039	螺钉	Screw	2	
19	29.04.040	上轴后轴套	Bearing support	1	
20	29.07.050	上轴	Main shaft	1	
21	02.07.029	挑线杆防油套	Oil resistant cover	4	
22	02.04.015	挑线杆部件	Thread take-up lever Asm.	1	
22	02.04.015H	挑线杆部件	Thread take-up lever Asm.	1	H
23	02.04.019	挑线杆	Electromagnet	1	
23	02.04.019H	挑线杆	Thread take-up lever	1	H
24	02.04.018	挑线连杆	Thread take-up bar	1	
25	23.76	油线	Oil thread	1	
26	02.09.005	螺钉	Screw	1	
27	02.04.020	挑线连杆销	Thread take-up crank shaft	1	
28	02.04.021	螺钉	Screw	1	
29	02.04.019	针杆连杆	Needle bar crank rod	1	
30	01.04.030	滚针轴承	Bearing	2	
31	02.04.016	挑线曲柄	Needle bar crank	1	
31	02.04.016H	挑线曲柄	Needle bar crank	1	H
32	29.04.014	绕线主动轮	Wheel	1	
33	29.02.039	螺钉	Screw	2	
34	01.10.040	螺钉	Screw	2	

3. 针杆、勾线分组件/Needle bar &Hook of driving shaft components

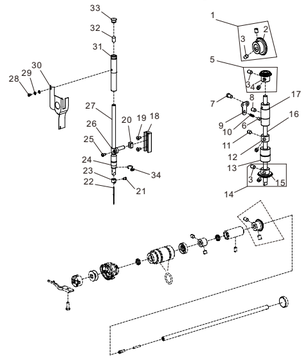

序号 Ref.No.	物料号 Part.No.	名称	Description	数量 Q'ty	备注 Remark
1	29.01.190	上轴伞齿轮部件	Gear	1	
2	29.01.190-1	上轴伞齿轮	Gear	1	
3	29.01.190-2	螺钉	Screw	8	
4	29.01.189-1	竖轴上伞齿轮	Gear	1	
5	29.01.189	竖轴上伞齿轮部件	Gear	1	
6	01.05.009	柱塞	Plunger	1	
7	12.06.036	螺钉	Screw	1	
8	01.10.040	螺钉	Screw	1	
9	29.07.014	柱塞压板	Plunger holder	1	
10	01.05.010	弹簧	Spring	1	
11	01.10.039	螺钉	Screw	2	
12	29.07.020	挡圈	Thrust collar	1	
13	29.07.090	竖轴下轴套	Bearing support	1	
14	29.01.191	竖轴下伞齿轮部件	Gear	1	
15	29.01.191-1	竖轴下伞齿轮	Gear	1	
16	29.07.029	竖轴	Upright shaft	1	
17	29.07.023	竖轴上轴套	Bearing support	1	
18	02.04.014	滑块槽	Guide rail	1	
19	02.09.034	螺钉	Screw	2	
20	02.04.004	针杆连接柱滑块	Slider	1	
21	01.10.006	螺钉	Screw	1	
22	01.04.029	DBx1 14#机针	Needle DBx1 14#	1	
22	29.01.200	DPx5 18#机针	Needle DPx5 18#	1	H
23	02.04.011	针杆线钩	Needle bar thread guide	1	
24	02.01.011	针杆下轴套	Bearing support	1	
24	02.01.020	针杆下轴套	Bearing support	1	H
25	02.04.017-2	螺钉	Screw	1	
26	02.04.017	针杆连接柱	Needle bar holder	1	
27	02.04.008	针杆	Needle bar	1	
27	02.04.008H	针杆	Needle bar	1	H
28	02.09.037	螺钉	Screw	1	
29	23.309	垫圈	Washer	2	
30	02.05.020	面部防油板	Oil stoper	1	
31	02.04.012	针杆上轴套	Bearing support	1	
32	0000	毛毡	Wool felt		
33	02.05.014	橡胶塞	Rubber plug	1	
34	02.04.007	针杆下轴套线钩	Needle bar thread guide	1	

3. 针杆、勾线分组件/Needle bar &Hook of driving shaft components

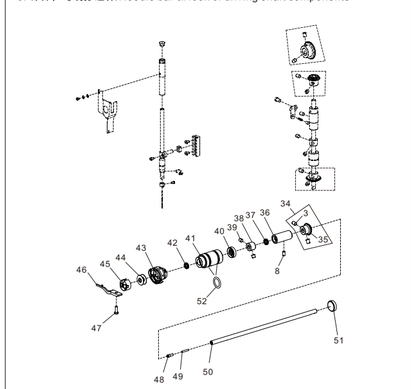

序号 Ref.No.	物料号 Part.No.	名称	Description	数量 Q'ty	备注 Remark
34	29.01.192	下轴伞齿轮部件	Gear	1	
35	29.01.192-1	下轴伞齿轮	Gear	1	
36	29.07.024	下轴后轴套	Bearing support	1	
37	29.05.102	油封	Oil seal	1	
38	29.07.020	挡圈	Thrust collar	1	
39	01.10.039	螺钉	Screw	2	
40	29.06.009	油封	Oil seal	1	
41	29.06.030	下轴前轴套	Bearing support	1	
42	29.05.102	油封	Oil seal	1	
42	29.01.070	7.94BOTR旋梭	Hook 7.94BTR	1	
43	29.01.110	7.94ATR旋梭	Hook 7.94ATR	1	
44	01.07.003	梭芯	Bobbin	1	H
45	29.01.002	梭壳	Bobbin case	1	
46	29.01.138	旋梭定位钩	Positioning finger	1	
47	01.10.010	螺钉	Screw	1	
48	02.09.021	下轴限油螺钉	Screw	1	
49	02.05.012	下轴限油芯	Oil wick	1	
50	29.01.085	下轴	Hook driving shaft	1	
51	02.05.015	橡胶塞	Rubber plug	1	
52	02.05.005	O形圈	O-ring	2	

4. 压脚分组件/Hang Lifter Components

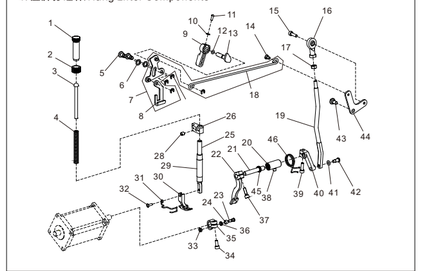

序号 Ref.No.	物料号 Part.No.	名称	Description	数量 Q'ty	备注 Remark
1	29.01.021	调压螺钉	Screw	1	
2	29.01.021A	调压螺母	Nut	1	
3	02.04.003	调压导杆	Presser guide bar	1	
4	29.01.178	调压簧	Spring	1	
5	02.09.014	螺纹销	Pin	2	
6	29.01.117	密封垫圈	Washer	2	
7	29.07.072	抬压脚前杠杆部件	Lifting lever link	1	
8	29.07.072-1	压脚开降板	Plate	1	
9	02.02.010BZ	压脚扳手	Hand lifter	1	
10	02.02.003	垫圈	Washer	1	
11	02.09.012	螺钉	Screw	1	
12	02.02.018	O形圈	O-ring	1	
13	29.01.177	压脚扳手凸轮部件	Hand lifter CAM ASM.	1	
14	02.09.013	螺钉	Screw	1	
15	27.08.012	螺钉	Screw	1	
16	29.07.045	鱼眼接头	Fish eye joint	1	
17	29.07.091	六角螺母	Nut	1	
18	29.07.072-2	抬压脚拉杆	Lifting lever connecting rod	1	
19	29.07.012	抬压脚后拉杆	Lifting lever connecting rod	1	
20	29.07.021	抬压脚轴套	Bearing support	1	
21	29.07.060	抬压脚轴	Shaft	1	
22	29.07.028	抬压脚前曲柄	Crank	1	
23	29.07.049-2	螺钉	Screw	1	
24	29.07.049-3	滚珠	Screw	1	
25	29.01.112	压杆	Screw	1	
26	29.07.073	压杆导架	Presser guide bar bracket	1	
27	23.311	开口挡圈	Snap ring	4	
28	02.09.018	螺钉	Screw	1	
29	29.07.079	压杆轴套	Bearing support	1	
30	01.04.015	活压脚部件	Presser foot ASM.	1	
30	01.04.015H	活压脚部件	Presser foot ASM.	1	H
31	02.05.022	护指架	Protect shelf	1	
32	01.10.033	螺钉	Screw	1	
33	29.07.049-4	六角螺母	Nut	1	
34	29.02.134	螺钉	Screw	1	
35	29.07.049	抬压脚驱动曲柄	Crank	1	
36	29.07.049-5	垫圈	Washer	1	
37	29.02.134	螺钉	Screw	1	
38	02.09.008	螺钉	Screw	1	
39	29.02.134	螺钉	Screw	1	
40	29.07.031	抬压脚后曲柄	Crank	1	
41	01.03.012	O形圈	O-ring	1	
42	29.07.046	螺钉	Screw	1	
43	29.07.066	螺钉	Screw	1	
44	29.07.013	抬压脚后杠杆	Lifting lever link	1	
45	29.07.008	油封	Oil seal	1	
46	0000	弹簧	Spring	1	

5. 剪线分组件/Thread Trimmer Components

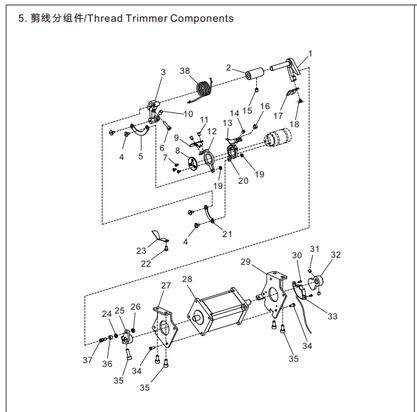

序号 Ref.No.	物料号 Part.No.	名称	Description	数量 Q'ty	备注 Remark
1	29.07.027	切线凸轮轴	Camshaft	1	
2	29.07.022	切线轴套	Bearing support	1	
3	29.06.016	切线曲柄	Trimming crank	1	
4	29.06.033	螺钉	Screw	4	
5	29.06.013	长连杆	Knife shaft crack rod	1	
6	29.02.134	螺钉	Screw	1	
7	29.02.104	螺钉	Screw	3	
8	29.06.020	刀架压板	Knife holder	1	
9	29.06.003	大动刀	Round knife	1	
10	29.06.016-2	缓冲垫	Block	1	
11	29.06.012	螺钉	Screw	2	
12	29.06.010	大动刀架	Round knife bracket	1	
13	29.06.002	小动刀	Round knife	1	
14	29.02.012	螺钉	Screw	1	
15	02.09.008	螺钉	Screw	1	
16	02.09.010	螺钉	Screw	1	
17	29.07.015	切线凸轮轴手柄	Hand shank	1	
18	01.10.006	螺钉	Screw	1	
19	29.06.032	六角螺母	Nut	2	
20	29.06.011	小动刀架	Round knife bracket	1	
21	29.06.014	短连杆	Knife shaft crack rod	1	
22	02.09.034	螺钉	Screw	1	
23	29.06.017	分线片	Dispart	1	
24	29.07.044-1	垫圈	Washer	1	
25	29.07.044-2	切线驱动曲柄	Trimming shaft	1	
26	29.07.044-3	六角螺母	Nut	1	
27	29.07.016	剪线电机前支架	Mounting plate	1	
28	30.01.093	剪线电机	Motor	1	
29	29.07.017	剪线电机后支架	Mounting plate	1	
30	01.10.006	螺钉	Screw	2	
31	30.01.093-2	螺钉	Screw	2	
32	30.01.093-3	感应片	Plate	1	
33	29.07.068	剪线电机传感器	Sensor	1	
34	11.05.070	螺钉	Screw	8	
35	29.02.134	螺钉	Screw	5	
36	29.07.044-4	滚珠	Roller bearing	1	
37	29.07.044-5	螺钉	Screw	1	
38	29.07.074	复位弹簧	Spring	1	

6. 送料分组件/Feed Mechanism Components

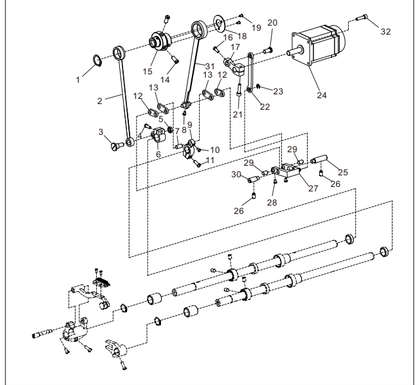

序号 Ref.No.	物料号 Part.No.	名称	Description	数量 Q'ty	备注 Remark
1	23.301	轴用挡圈	Snap ring	1	
2	02.07.016	抬牙连杆	Connecting rod	1	
3	02.09.025	螺钉	Screw	1	
4	29.02.113	螺钉	Screw	1	
5	02.09.041	六角螺母	Nut	1	
6	02.07.023	抬牙后曲柄	Lifting rocker	1	
7	02.07.007	销	Pin	1	
8	02.09.011	螺钉	Screw	1	
9	02.07.020	送布曲柄	Feed rocker	1	
9	02.07.020H	送布曲柄	Feed rocker	1	H
10	02.09.011	螺钉	Screw	1	
11	01.10.023	螺钉	Screw	1	
12	02.07.008	短摆动板	Short link	2	
12	02.07.008H	短摆动板	Short link	2	H
13	02.07.009	长摆动板	Long link	2	
14	02.09.027	螺钉	Screw	2	
15	02.07.022	送料偏心轮	Feed drive eccentric cam	1	
15	02.07.022H	送料偏心轮	Feed drive eccentric cam	1	H
16	29.02.101	螺钉	Screw	1	
17	29.07.038	针距曲柄	rocker	1	
18	02.07.011	偏心轮盖板	Thrust cover	1	
19	29.02.104	螺钉	Screw	2	
20	29.07.039	针距曲柄销	Pin	1	
21	29.02.133	螺钉	Screw	1	
22	29.07.030	针距连杆	Link	1	
23	23.308	开口挡圈	Snap ring	1	
24	30.01.092	针距电机	Motor	1	
25	02.03.005	右销	Pin	1	
26	02.09.005	螺钉	Screw	2	
27	29.07.089	摆动板座部件	Feed adjusting ASM.	1	
28	02.09.011	螺钉	Screw	2	
29	02.07.010	销	Pin	2	
30	02.03.006	左销	Pin	1	
31	0000	送料连杆	Connecting rod	1	
32	0000	螺钉	Screw	4	

6. 送料分组件/Feed Mechanism Components

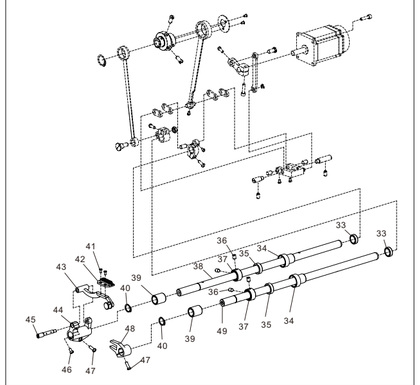

序号 Ref.No.	物料号 Part.No.	名称	Description	数量 Q'ty	备注 Remark
33	0000	橡胶塞	Rubber plug	2	
34	29.01.036	送料轴前轴套	Bearing support	2	
35	0000	油封	Oil seal	2	
36	0000	螺钉	Screw	4	
37	0000	送料轴挡圈	Thrust collar	2	
38	29.07.053	送料轴	Feed rocker shaft	1	
39	29.01.036	抬牙送料轴前轴套	Bearing support	2	
40	23.301	轴用弹性挡圈	Snap ring	2	
41	02.09.029	螺钉	Screw	2	
42	29.01.093	送料牙	Feed dog	1	H
43	29.01.092	牙架部件	Feed bar ASM.	1	
44	29.01.092-1	牙架曲柄	Feed bar driving crank	1	
45	29.01.092-2	牙架销	Pin	1	
46	29.01.092-3	螺钉	Screw	1	
47	29.01.092-4	螺钉	Screw	2	
48	29.01.092-6	抬牙叉形曲柄	Lifting fork	1	
49	29.07.052	抬牙轴	Feed driving shaft	1	

7. 润滑分组件/Lubrication Components

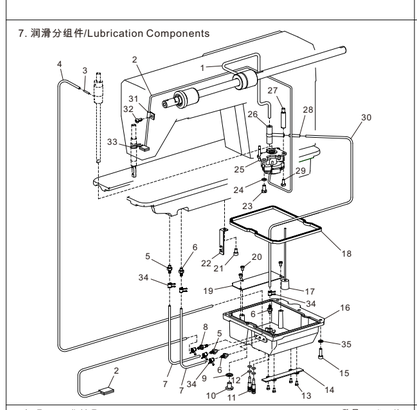

序号 Ref.No.	物料号 Part.No.	名称	Description	数量 Q'ty	备注 Remark
1	29.07.029	上轴供油管	Main shaft oil tube	1	
2	23.72	回油管部件	Oil tube	2	
3	01.05.008	油管接头	Oil pipe joint	1	
4	23.80	油管回油管	Oil tube	1	
5	29.05.017	油管接头	Oil pipe joint	2	
6	29.05.016	油管接头	Oil pipe joint	3	
7	23.80	旋梭油管	Oil tube	2	
8	29.05.040	油管接头	Oil tube holder	1	
9	01.09.003	密封垫圈	Washer	1	
10	29.07.048	放油螺钉	Screw	1	
11	29.07.047	油量调节螺钉	Screw	2	
12	02.02.018	O形圈	O-ring	2	
13	02.09.034	螺钉	Screw	4	
14	29.07.042	油盘电线压板	Wire pressing plate	1	
15	29.02.097	螺钉	Screw	6	
16	16.030	小油盘	Oil reservoir	1	
17	29.07.036	油标部件	Oil pointer ASM.	1	
18	29.07.003	油盘密封垫	Gasket	1	
19	29.07.043	隔油板	Oil baffler	1	
20	02.09.034	螺钉	Screw	3	
21	29.02.134	螺钉	Screw	1	
22	29.07.058	油管支架	Oil pipe support	1	
23	29.02.057	螺钉	Screw	1	
24	23.302	弹簧垫圈	Washer	1	
25	29.07.132	油泵部件	Oil pump	1	
26	02.05.004	三通接头	Tee joint	1	
27	02.05.010	油泵连接螺柱	Stud	1	
28	29.05.015	油管接头	Oil pipe joint	1	
29	01.10.010	螺钉	Screw	2	
30	23.80	旋梭供油管	Oil tube	2	
31	29.01.016	油管夹	Tubing buckle	1	
32	02.09.007	螺钉	Screw	1	
33	29.01.198	回油毡夹	Oil felt preser	1	
34	29.05.108	油管夹	Tubing buckle	6	
35	23.303	弹簧垫圈	Washer	6	

8. 电控分组件/Drive-by-wire Components

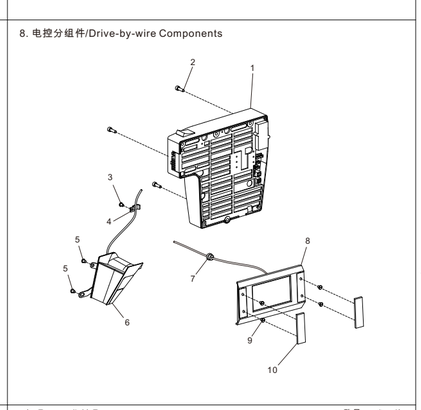

序号 Ref.No.	物料号 Part.No.	名称	Description	数量 Q'ty	备注 Remark
1	30.01.090	双步进电控	Electric control panel	1	
2	29.07.088	螺钉	Screw	3	
3	02.09.007	螺钉	Screw	1	
4	05.05.016	电线夹	Cable clip	1	
5	02.09.007	螺钉	Screw	2	
6	29.07.054HL	机头灯部件	Head light	1	
7	29.01.229	橡胶塞	Rubber plug	1	
8	30.01.091	显示屏部件	Display ASM.	1	
9	29.07.087	螺钉	Screw	4	
10	30.01.091-2	盖板	Cover plate	2	

9. 附件/Auxiliaries

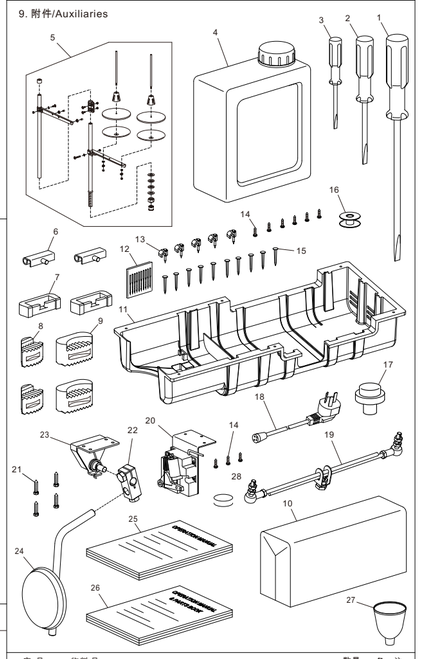

序号 Ref.No.	物料号 Part.No.	名称	Description	数量 Q'ty	备注 Remark
1	01.09.023-1	大螺丝刀	Screw driver	1	
2	01.09.023-2	中螺丝刀	Screw driver	1	
3	01.09.023-3	小螺丝刀	Screw driver	1	
4	01.09.020	油壶(带油)	Oil box	1	
5	01.09.021	二线架部件	Thread stand ASM.	1	
6	01.09.009	机头连接钩部件	Head connecting hook	2	
7	29.01.234	机头连接钩座	Head connecting hook socket	2	
8	29.01.235	油盘支座	Oil reservoir seat	2	
9	29.01.236	油盘座垫	Oil reservoir cushion	2	
10	23.64	机头罩	Head cover	1	
11	16.031	大油盘	Oil reservoir	1	
12	02.04.029	机针DBx1 14#	Needle DBx1 14#	10	
12	29.01.200	机针DPx1 18#	Needle DPx5 18#	10	H
13	23.304	电线夹	Cable clip	15	
14	23.305	木螺钉	Wood screw	9	
15	23.306	鞋钉	Spikes	10	
16	01.07.003	梭芯	Bobbin	1	
17	29.07.001	机头支柱	Head pole	1	
18	30.01.049	电源线	Power cord	1	
19	30.01.090-2	踏板连杆	Pedal control rod ASM.	1	
20	30.01.028	控速器	Speed controller	1	
21	23.307	木螺钉	Wood screw	4	
22	01.09.036	操纵杆接头	Bracket ASM.	1	
23	30.01.090-2	电子膝靠部件	Electronic knee control ASM.	1	
24	02.08.012	操纵杆部件	Knee pressing plate ASM.	1	
25	30.01.090-3	电控说明书	Electric control manual	1	
26	23.141	零件手册	Parts book	1	
27	12.05.172	漏斗	Funnel	1	
28	23.308	磁铁	Magnet	1	